DW614 ROUTER ATTACH 4

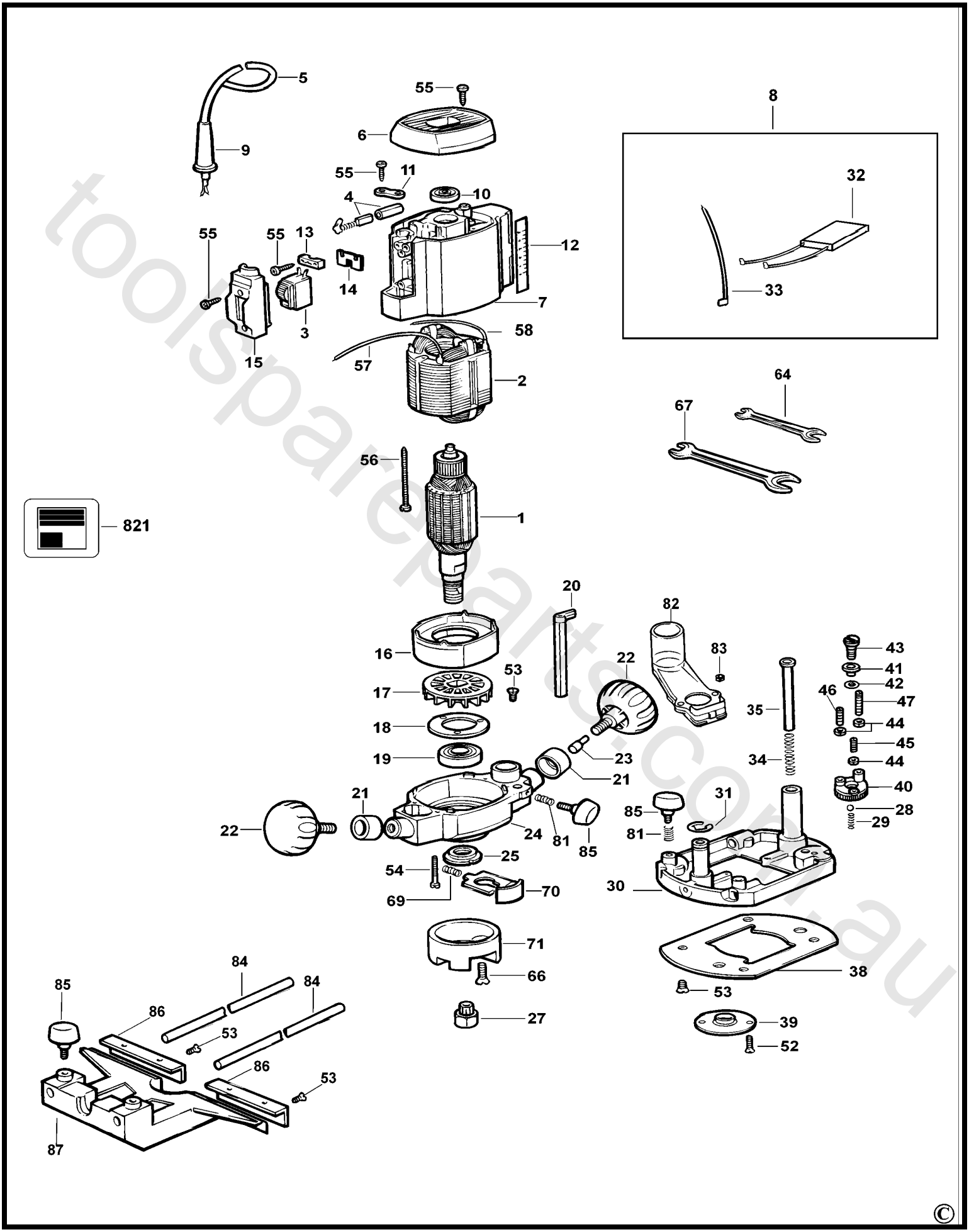

toolspareparts.com.au

©